DOI 10.1515/revneuro-2012-0075 — Rev. Neurosci. 2013; 24(2): 125–138

David B. Weintraub and Kareem A. Zaghloul*

The role of the subthalamic nucleus in cognition[a]

Abstract: Because the complex functions of the basal ganglia have been increasingly studied over the past several decades, the understanding of the role of the subthalamic nucleus (STN) in motor and cognitive functions has evolved. The traditional role in motor function ascribed to the STN, based on its involvement in the cortico-striato-thalamo-cortical motor loops, the pathologic STN activity seen in Parkinson's disease, and the benefits in motor symptoms following STN lesions and deep brain stimulation, has been revised to include wider cognitive functions. The increased attention focused on such nonmotor functions housed within the STN partially arose from the observed cognitive and affective side effects seen with STN deep brain stimulation. The multiple modalities of research have corroborated these findings and have provided converging evidence that the STN is critically involved in cognitive processes. In particular, numerous experiments have demonstrated the involvement of the STN in high-conflict decisions. The different STN functions appear to be related to activity in anatomically distinct subregions, with the ventral STN contributing to high-conflict decision-making through its role in the hyperdirect pathway involving the prefrontal cortex.

Keywords: cognition; deep brain stimulation (DBS); subthalamic nucleus (STN).

[a]This research was supported by the Intramural Research Program of the NIH, NINDS.
***Corresponding author: Kareem A. Zaghloul,** Surgical Neurology Branch, National Institutes of Health, 10 Center Drive, 3D20, Bethesda, MD 20814, USA, e-mail: kareem.zaghloul@nih.gov
David B. Weintraub: Surgical Neurology Branch, National Institutes of Health, 10 Center Drive, 3D20, Bethesda, MD 20814, USA

Introduction

Because the complex functions of the basal ganglia have been increasingly studied over the past several decades, the understanding of the role of the subthalamic nucleus (STN) in motor and cognitive function has evolved. The traditional role in motor function ascribed to the STN, based on its involvement in the cortico-striato-thalamo-cortical motor loops, the pathologic STN activity seen in Parkinson's disease (PD), and the benefits in motor symptoms following STN lesions and deep brain stimulation (DBS), has been revised to include wider cognitive functions. The increased attention focused on such nonmotor functions housed within the STN partially arose from the observed cognitive and affective side effects seen with STN DBS. The multiple modalities of research have corroborated these findings and have provided converging evidence that the STN is critically involved in cognitive processes. In particular, numerous experiments have demonstrated the involvement of the STN in high-conflict decisions. The different STN functions appear to be related to the activity in anatomically distinct subregions, with the ventral STN contributing to high-conflict decision-making through its role in the hyperdirect pathway involving the prefrontal cortex.

Here, we will review the literature that has led to this understanding of the role of the STN in cognition. We will begin by reviewing the anatomy of the STN and will describe various anatomic and computational models of the pathways of STN activity. We will discuss the results from animal experiments investigating the effect of STN lesions and stimulation on cognitive tasks. Then, we will review the clinical effects observed after STN DBS in terms of both cognitive and affective side effects. Next, we will turn to human experimental studies. We will review imaging findings demonstrating STN activity during various cognitive tasks as well as functional imaging changes seen with STN stimulation. We will discuss experiments that specifically address the effects of STN stimulation on cognitive function and emotion and will examine the results of electrophysiology studies of human STN activity related to cognitive function. In each section, we will consider the literature regarding both cognitive and affective processes housed within the STN. We will emphasize the cognitive component because the experimental, clinical, and theoretical literature in this domain is more robust. The purpose of this review is to synthesize the literature to date on the nonmotor functions of the STN. Ultimately, an improved understanding of the intricacies of the STN functions will hopefully yield more sophisticated and effective means of treating disorders in which this nucleus is involved.

STN anatomy

The STN is a biconvex structure situated between the internal capsule anterolaterally, the cerebral peduncle and substantia nigra ventrolaterally, the red nucleus

Bereitgestellt von | De Gruyter / TCS
Angemeldet | 46.30.84.116
Heruntergeladen am | 28.02.14 10:21

posteromedially, and the thalamus and zona incerta dorsally (Figure 1A). The nucleus consists of approximately 560,000 neurons and is approximately 240 mm^3 in volume in humans. The nucleus receives its vascular supply from both anterior and posterior circulations via the anterior choroidal artery, the posterior communicating artery, and the posteromedial choroidal arteries. Notably, one of the early surgical treatments for PD was anterior choroidal artery ligation, the benefits of which may have been related to the effect of STN infarction (Hamani et al., 2004).

The studies of basal ganglia motor function led to a model of direct and indirect striatal output pathways that originate from separate neuronal populations and contain different dopamine receptors with opposite end-effects. The monosynaptic direct pathway, activated by striatal D1 receptors, connects the putamen and the internal segment of the globus pallidus (GPi), with resultant decrease in the inhibition of the ventrolateral (VL) thalamic nucleus and resultant motor facilitation. The polysynaptic indirect pathway, activated by striatal D2 receptors, connects the putamen and the GPi via intervening synapses in the external segment of the globus pallidus (GPe) and STN with resultant GPi excitation and increased VL inhibition and concomitant motor inhibition (Figure 1B, left) (Alexander and Crutcher, 1990). This indirect pathway, involving the STN, has been viewed as an inhibitory modulator of motor output and the pathway works in concert with the direct pathway to allow for the execution of a given motor program and the inhibition of others.

Based on this model of direct and indirect pathways and the role of dopamine depletion in the pathophysiology of PD, new insights were gained through animal models of PD into the role of the basal ganglia in the pathophysiology of movement disorders (Figure 1B, middle). In 1-methyl-4-phenyl-1,2,3,6-tetrahydropyridine (MPTP)-treated primates, both GPi and STN demonstrated increased neuronal firing rates (Bergman et al., 1994), leading to the interpretation that, in hypokinetic disorders, including PD, dopamine loss leads to the disinhibition of the STN through the indirect pathway and the excitation of the GPi through both direct and indirect pathways. The resultant cumulative thalamic inhibition results in bradykinesia observed in PD, whereas, conversely, increased thalamic output serves as the basis for hyperkinetic disorders (Bergman et al., 1994; Wichmann et al., 1994a,b). Based on this interpretation, a renewed interest in surgical treatments for PD led to the revival of both pallidotomy and subthalamotomy, effective procedures that had largely been abandoned after the discovery of levodopa. These lesions were found to reverse parkinsonian symptoms in animal models and in patients (Figure 1B, right). Soon after, the high-frequency stimulation (HFS) of the STN was shown to exhibit similar benefits for the motor symptoms of PD (Limousin et al., 1995a,b). Clinical trials demonstrated the significant benefit of STN DBS on the motor symptoms of PD, particularly tremor and rigidity, compared with medical therapy (Deuschl et al., 2006; Weaver et al., 2009; Williams et al., 2010), and the treatment gained Food and Drug Administration approval in 2002.

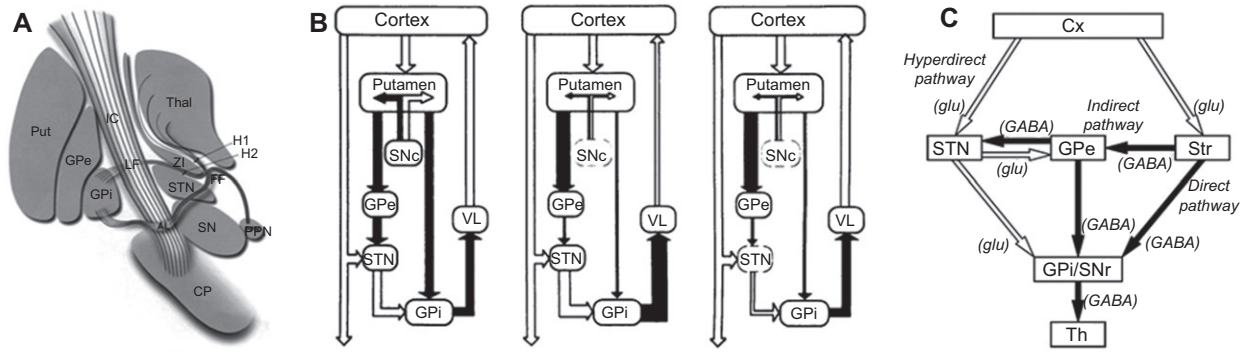

Figure 1 (A) Schematic representation of the position of the STN and the surrounding structures and tracts. AL, ansa lenticularis; CP, cerebral peduncle; FF, fields of Forel; Hl, Hl field of Forel (thalamic fasciculus); IC, internal capsule; LF, lenticular fasciculus (H2); PPN, pedunculopontine nucleus; Put, putamen; SN, substantia nigra; Thal, thalamus; ZI, zona incerta. From Hamani et al. (2004) (courtesy of Oxford Publications). (B) Representation of direct and indirect pathways of motor control in the normal state (left), parkinsonian state with loss of dopamine input from the substantia nigra in an MPTP model (middle), and after treatment of MPTP-induced dopamine depletion with STN lesioning (right). Filled arrows, inhibitory connections; open arrows, excitatory connections. SNc, substantia nigra pars compacta. From Bergman et al. (1990) (permission pending). (C) Representation of the role of the hyperdirect pathway in relation to the direct and indirect pathways, demonstrating signal from the cortex through the STN to the GPi and then thalamus. From Nambu (2004) (Reprinted with permission from the original reference).

Bereitgestellt von | De Gruyter / TCS
Angemeldet | 46.30.84.116
Heruntergeladen am | 28.02.14 10:21

Despite the established clinical benefit of STN DBS, though, several clinical inconsistencies were noted with the rat model of basal ganglia function. Specifically, the lesions of GPi did not result in dyskinesias, and the lesions in the thalamic motor nuclei did not result in akinesia (Marsden and Obeso, 1994). As a result, attention shifted in subsequent years to abnormalities of basal ganglia and thalamic burst patterns in PD (Hammond et al., 2007) and to the pathologic synchronous β frequency oscillations observed in the STN and GPi in both primate models and patients with PD (Heimer et al., 2002; Goldberg et al., 2004; Kuhn et al., 2005b; Weinberger et al., 2006). According to this interpretation, the pathologic hypersynchronization of the cortico-basal ganglia-thalamocortical pathway contributes to the motor symptoms of PD. Indeed, the reductions in these oscillations correlate with the administration of levodopa (Levy et al., 2002), and some evidence suggests that the function of STN DBS is the disruption of these pathologic β oscillations (Brown et al., 2004; Meissner et al., 2005).

Although significant progress has been made in understanding the motor control circuits of the basal ganglia, motor control comprises only one component of the segregated and parallel motor, associative, and limbic loops hypothesized to govern basal ganglia function (Alexander and Crutcher, 1990; Alexander et al., 1990). Similarly, the STN has been subdivided into three functional regions: a dorsolateral region that connects with motor pathways and the ventral and medial segments that connect with associative and limbic pathways respectively (Figure 2A) (Parent and Hazrati, 1995). The specific functions of the STN within, and the connections to, these associative and limbic circuits are not as well defined as in the motor circuit. The associative, or prefrontal, circuits originating from the dorsal prefrontal cortex and the lateral orbitofrontal cortex project through the dorsolateral head of the caudate nucleus to the globus pallidus and substantia nigra, and then to the ventral anterior and centromedian thalamic nuclei, before closing the loop back to the cortex (Figure 2B) (Alexander et al., 1990). The exact connection of the STN to this circuit is not well defined, although the known connections between the STN and the globus pallidus and substantia nigra suggest its involvement (Temel et al., 2005). The limbic circuit involves projections from the anterior cingulate and medial orbitofrontal cortex to the mesiotemporal limbic cortices, hippocampus, and amygdala that further connect through the ventral striatum to the ventral pallidum (VP) and medial dorsal thalamic nuclei. The STN has reciprocal connections with the VP, which is considered the major limbic circuit output. Modulation of STN neurons directly impacts VP activity, strongly implicating the STN in cortical limbic circuit function (Figure 2B) (Alexander et al., 1990; Parent and Hazrati, 1995; Temel et al., 2005).

More recently, a "hyperdirect" pathway has been described that involves an early signal from the motor cortex through the STN to GPi (Nambu et al., 2002). According to models incorporating this pathway, the execution of a voluntary movement is preceded by a fast, short latency signal from the cortex to the STN that is then conveyed to GPi, which diffusely inhibits the motor thalamus. Subsequent activation of the cortico-striatal direct pathway disinhibits the motor thalamus for a selected motor function, whereas the indirect pathway sends a third signal to suppress the competing actions (Figure 1C) (Nambu, 2004). The functional significance of the hyperdirect pathway

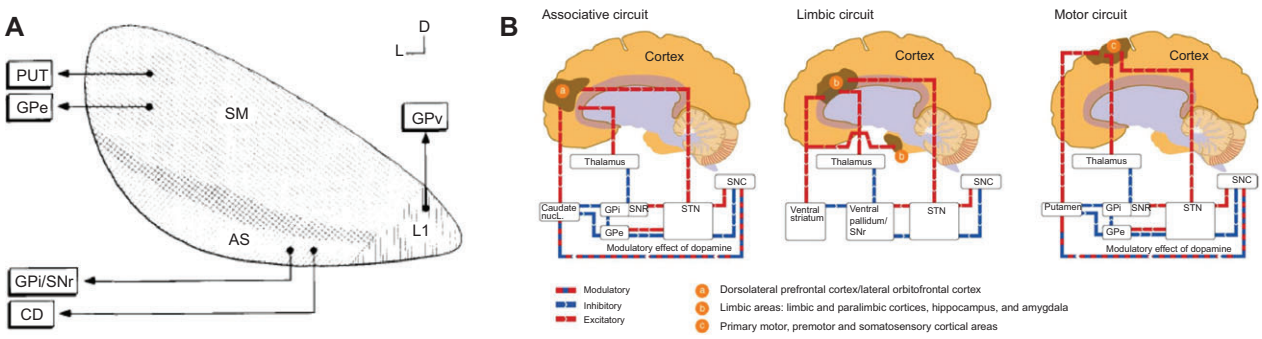

Figure 2 (A) Schematic representation of the anatomic subterritories within the STN and their projections based in the primate based on tracer studies. AS, associative; CD, caudate nucleus; GPv, ventral pallidum; LI, limbic; PUT, putamen; SM, sensorimotor; SNr, substantia nigra pars reticulata. From Parent and Hazrati (1995). (B) (left) The associative pathway involves the dorsolateral and lateral orbitofrontal cortices, which project both directly to STN and to the head of the caudate, with further projections to GPi and GPe, involving STN then through the direct and indirect pathways. (Middle) The connections of the STN to the VP and the relationship of the VP with the ventral striatum, mediodorsal nucleus of the thalamus, and other limbic structures implicate the STN in these limbic pathways. (Right) From Temel et al. (2005) (Reprinted with permission from the original reference).

Bereitgestellt von | De Gruyter / TCS
Angemeldet | 46.30.84.116
Heruntergeladen am | 28.02.14 10:21

is of particular importance in models incorporating STN function in decision-making (Gurney et al., 2001; Frank, 2006; Humphries et al., 2006; Bogacz and Gurney, 2007; Ratcliff and Frank, 2012). These models focus on the relationship between the medial prefrontal cortex (mPFC), already extensively described in its role in decision-making (Kable and Glimcher, 2009), and the basal ganglia, particularly the STN. In such models, the STN dynamically adjusts response thresholds based on competing cortical inputs, hence enabling the integration of multiple inputs to achieve an optimal decision (Frank, 2006). Theoretical work and electrophysiologic studies, described below, have provided support for this function.

Experimental animal studies

The numerous animal lesion and stimulation studies helped elucidate the cognitive functions of the STN (Baunez and Lardeux, 2011). In one of the first STN lesion studies exploring cognitive function, rats undergoing dopamine depletion following injection of 6-OHDA demonstrated parkinsonian symptoms with significantly increased delayed responses on a simple reaction time task (Baunez et al., 1995). The subsequent STN lesioning with ibotenic acid injection reversed these delays but also resulted in greater rates of error due to increased premature responses. Histopathologic analysis demonstrated greater damage to the medial as opposed to dorsolateral STN following injection, consistent with the differential network involvement of subterritories of the STN (Baunez et al., 1995).

In a subsequent study, STN lesioned rats committed significantly more errors on an attentional task, primarily because of premature responses, and had significantly longer response times during correct choices (Baunez and Robbins, 1997). The paradoxical finding of increased correct response latency and increased premature responses implicates the STN in both attention and impulsivity. STN lesioning also has been shown to impair the ability of rats to stop an initiated action (Eagle et al., 2008) and to result in an increased response impulsivity (Wiener et al., 2008), together implicating the STN in response inhibition (Figures 3A and 3B).

The studies investigating the effects of STN HFS on cognitive processes have demonstrated similar, but not identical, results. STN HFS applied to both control and dopamine-depleted rats resulted in significantly more errors in accuracy and increased latency in an attentional task but did not result in increased rates of premature responses (Baunez et al., 2007). Notably, these cognitive changes were transient and did not persist when stimulation was continued beyond several days. In a separate study, the premature responses elicited by HFS (130 Hz) linearly decreased with the amplitude of stimulation, whereas low-frequency stimulation (30 Hz) demonstrated no effect (Desbonnet et al., 2004). Although these results highlight the uncertainty of the mechanism of DBS, the study does confirm the role of the STN in cognitive processes.

A number of animal behavioral and electrophysiologic studies have similarly explored the function of the STN in motivation and reward (Baunez et al., 1995, 2002, 2005; Baunez and Robbins, 1997; Le Jeune et al., 2009). STN lesions result in increased motivation for a conditioned reward in terms of both how much a rat anticipated the conditioned reward (Baunez et al., 2002) and how much the animal was willing to work for a given reward (Baunez et al., 2005). This effect seemed to be related to the nature of the reward, because the finding was present for food rewards but not for cocaine (Figure 3C) (Baunez et al., 2005). High-frequency STN stimulation had a similar effect, increasing motivation for food while decreasing motivation for cocaine (Rouaud et al., 2010). The animal's initial reward preference has been shown to determine the nature of the effect (Lardeux and Baunez, 2008), suggesting that the STN lesions may contribute to the reinforcement of the initial preferences in humans as well.

Although there are relatively few studies investigating the cognitive functions of the STN in nonhuman primates, STN neurons were demonstrated to increase the activity in response to visual cues indicating upcoming reward in a visually guided reward task (Matsumura et al., 1992). The location of these responsive neurons within the STN was not specified. More recently, both increases and decreases in STN activity were shown during reward anticipation and delivery (Darbaky et al., 2005). Although the neurons in the ventromedial STN were not explicitly sampled in this study, these changes in STN activity were observed along the entire course of the STN recording tract. In another study investigating the role of the STN in a visual reward task, the STN neurons found predominantly in the ventral associative STN demonstrated increased activity both when making volitional eye movements and when inhibiting habitual saccades (Isoda and Hikosaka, 2008).

Overall, the numerous experimental animal studies investigating the cognitive contributions of the STN confirm the involvement of the nucleus in pathways related to cognitive and affective functions. The role of the STN in response inhibition has been established, particularly during responses requiring a higher degree

Bereitgestellt von | De Gruyter / TCS
Angemeldet | 46.30.84.116
Heruntergeladen am | 28.02.14 10:21

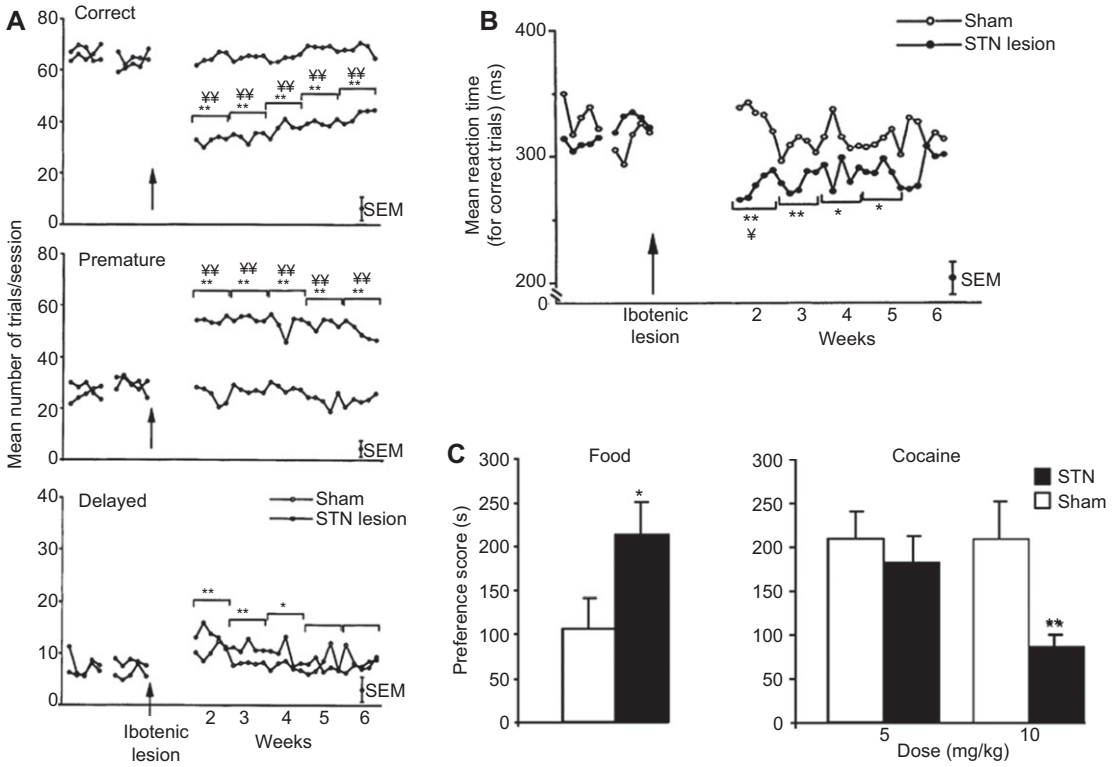

Figure 3 (A) In a reaction time task in rats, STN lesions caused increased error rate accounted for by increased premature responses with associated decreased reaction times. There was no difference in delayed responses between groups. (B) These increased errors were accompanied by faster reaction times in correct trials. (C) STN lesions resulted in differential effects on the preferences of rats for food compared with cocaine rewards. Reproduced from Baunez et al. (1995) and Baunez et al. (2005) (Reprinted with permission from the original reference).

of cognitive input. In addition, emotional or affective process functions are implicated in the studies investigating reward motivation. Taken together, these findings provide an important foundation for further studies in humans and yield some insight into the conflicting results seen in the clinical application of STN DBS.

Clinical cognitive and affective side effects of STN DBS

With the proliferation of STN DBS over the past two decades, numerous clinical studies have reported cognitive and behavioral side effects associated with stimulation (Temel et al., 2005). Caution, however, must be exercised in drawing conclusions regarding STN neurophysiologic functions from these studies. All clinical studies by definition involve patients with PD, in which the known pathologic activity of the STN limits any interpretation of the normal STN function. In addition, the ability to differentiate the effects of DBS from those of disease progression is limited to the few clinical trials that include control PD patients and that control for changes in medical management during stimulation. For example, a reduction in levodopa doses following STN DBS may result in fewer disabling medication-induced dyskinesias but also precipitate depressive side effects. The effects on groups of patients must also be distinguished from individual patient effects, and global cognitive or behavioral function must be separated from particular processes. In addition, the precise location of the DBS stimulating electrode within the STN and its subterritories is not confirmed in many studies, making it unclear whether the stimulation is indeed being applied within the STN, which subregion of the STN is receiving stimulation, and whether the observed effects are the result of direct stimulation or current spread to structures outside the STN. Finally, because the mechanisms of action of DBS are incompletely understood, the ability to infer the normal cognitive and affective functions of the STN from clinical stimulation is quite limited. Given these limitations, however, we will review those clinical studies that provide the greatest insight into the cognitive and affective functions of the STN.

The most consistent cognitive effect reported with STN stimulation is a decline in verbal fluency, with additional

Bereitgestellt von | De Gruyter / TCS
Angemeldet | 46.30.84.116
Heruntergeladen am | 28.02.14 10:21

cognitive changes also reported in response inhibition, working memory, and executive function and with affective changes including depression and hypomania (Temel et al., 2005). More infrequently, improvements in overall cognitive function, including specific components such as mental flexibility and working memory, have been reported (Jahanshahi et al., 2000). In a meta-analysis examining the effect of STN stimulation on cognition and affect, 41% of patients receiving chronic bilateral STN DBS exhibited cognitive side effects, 8% exhibited depression, and 4% exhibited hypomania (Temel et al., 2006b). These findings have been interpreted in the context of the differential subregions of the STN: whereas dorsolateral STN stimulation provides motor symptom benefit, the inhibition of the ventral and medial STN likely contributes to the cognitive and affective side effects, respectively (Temel et al., 2005; Voon et al., 2006). A number of subsequent studies investigating the long-term effects of STN stimulation have demonstrated relatively minor global cognitive deficits. The cognitive side effects seen after 5 years of stimulation did not worsen over subsequent years (Fasano et al., 2010). Whereas STN compared with GPi DBS resulted in significantly more cognitive side effects including word fluency and abstract reasoning, despite increased motor efficacy (Rodriguez-Oroz et al., 2005), others found that global cognitive function was unchanged (Contarino et al., 2007).

One way to investigate the role of the STN in cognitive functions is to compare the effects of STN DBS with standard medical therapy. In a randomized trial of STN DBS compared with best medical therapy in 156 patients, STN DBS demonstrated significant benefits at 6 months in terms of the primary outcomes of quality of life and severity of motor symptoms off medication, with no significant differences in overall cognitive and neuropsychiatric function between groups (Deuschl et al., 2006). Although the individual adverse events of dysarthria, depression, and mild or moderate cognitive disturbances were seen in the stimulation group, the episodes of depression had all resolved by the end of the 6-month study period. However, in a subset of 123 patients in this study who underwent detailed neuropsychiatric testing, STN DBS resulted in a significant decline in specific executive functions, such as semantic and phonemic verbal fluency, and significantly more errors in a Stroop interference task. Notably, other cognitive functions, including verbal memory, digit span, and delayed recall, were not affected, and the measures of affect demonstrated no significant changes in combined measures of anxiety and depression, mania, apathy, or hostility (Witt et al., 2008). Although microelectrode recording was used in these studies to help localize DBS implantation, the articles do not comment on the assessment of the final position of the stimulating electrode.

Another way of examining the cognitive and affective functions of the STN is to observe the effects seen during STN DBS compared with GPi DBS. In one study of 299 patients randomly assigned to STN or GPi DBS, there were no significant changes in the primary outcome of motor function at 24 months (Follett et al., 2010). However, although there were no significant changes in quality-of-life measures of cognition or emotional well-being, patients receiving STN DBS had a small but significant increase in depression compared with a slight decrease in those receiving GPi DBS. Furthermore, although both groups demonstrated declines in processing speed, working memory, and verbal fluency at the time of assessment, the only significant difference between the groups was seen in significantly greater declines in processing speed in patients receiving STN DBS. Interestingly, neither group demonstrated a change in performance in the Stroop interference test (Follett et al., 2010). In a separate study investigating the effects of DBS on cognition and mood, 52 patients were randomized to unilateral STN or GPi DBS and evaluated for the effects on mood, depression, and verbal fluency at 7 months after implantation with optimal stimulation and when stimulation was applied more ventrally, dorsally, or turned off (Okun et al., 2009). Although, with ventral stimulation, patients in both groups were less happy and more confused, stimulation location did not impact the changes in verbal fluency. Indeed, the decline in verbal fluency seen with STN DBS persisted even when stimulators were turned off, suggesting that this effect may result from the lesional impact of surgical implantation itself (Okun et al., 2009).

Although these clinical trials mainly assess the impact of STN DBS on the entire population, the discrepancies with regard to effects of STN DBS on cognition and mood point to the difficulty in drawing conclusions regarding the actual cognitive or affective functions of the STN based on clinical effects, even in well-controlled studies. Smaller studies examining acute changes as a result of stimulation may provide additional insight into cognitive and affective processes in which the STN functions.

In one study investigating declarative and nondeclarative memory in 12 patients with bilateral STN DBS, patients off stimulation demonstrated a significant deficit in nondeclarative memory compared with healthy controls, but this deficit was reversed with active stimulation (Halbig et al., 2004). Conversely, stimulation resulted in a significant decline in declarative memory, suggesting that the distinction between the effects on memory may be related to the differential effects on the dorsal

Bereitgestellt von | De Gruyter / TCS
Angemeldet | 46.30.84.116
Heruntergeladen am | 28.02.14 10:21

striatum via the associative pathway and the mesiotemporal lobe via the limbic pathway (Halbig et al., 2004). In a separate study investigating the effects of STN stimulation on working memory and response inhibition in 24 patients who had undergone bilateral DBS, STN stimulation resulted in impaired performance in both a spatial delayed recall task and a Go–No Go task during conditions of high cognitive load (Hershey et al., 2004). The authors interpret the results as evidence that STN stimulation interferes with the processes that require high cognitive control. This interference on the braking function of the STN simultaneously allows for the benefits in PD in terms of rigidity while impairing higher cognitive function (Hershey et al., 2004).

Indeed, the changes in response inhibition have been demonstrated in several studies investigating the cognitive effects of STN stimulation. In one study of 13 patients investigating the effects of stimulation, STN stimulation resulted in significantly more errors in the Stroop interference test but also improved performance in the random number generation test, trail-making test, and Wisconsin card-sorting test (Jahanshahi et al., 2000). The authors note that the similarity of tasks in which there was improvement with STN stimulation and posit that such stimulation may restore the integrity of circuits involving the dorsolateral prefrontal cortex (Jahanshahi et al., 2000). Furthermore, that performance on the Stroop interference task was impaired is consistent with premature responses seen with STN lesioning and stimulation in animal studies and with the proposed role the STN plays in conflictual decision-making (Jahanshahi et al., 2000). In another study, STN stimulation decreased reaction time for both simple and complex responses, although the effect of stimulation on response times for complex responses was significantly less than for simple responses (Temel et al., 2006a). In addition, STN stimulation enabled faster execution of a random number generation task but also elicited more errors in a Stroop interference task (Witt et al., 2004). It is important to note, however, that not all studies have found effects on cognitive measures in patients when they were tested on compared with off stimulation (Fraraccio et al., 2008).

With its effects on response inhibition, STN stimulation seems to increase impulsivity by releasing the braking signal normally administered by the STN during high-conflict decisions. Examining error rates during cognitive tasks can assess the impact of this change. In one study, healthy controls and patients with PD chose between symbols with learned reward values as reaction times and error rates were measured for decisions in which the assigned difference in value was high (low conflict) compared with low (high conflict) (Frank et al., 2007). During high-conflict trials, healthy controls and patients with PD on medication and off stimulation demonstrated significant increases in reaction times. Patients receiving STN stimulation, however, had significantly shorter reaction times and made significantly more errors, suggesting that HFS removed the normal inhibitory braking signal provided by the STN (Frank et al., 2007). Another study has found that STN stimulation increases impulsivity even in low-conflict simple Go–No Go motor tasks, suggesting a role of the STN in both tonic and phasic inhibition (Ballanger et al., 2009).

Fewer studies have directly investigated the acute effects of STN stimulation on affective processes. In an important demonstration of the significance of the different subregions within the STN, two patients experienced reproducible, stimulation-related hypomania with stimulation of ventral contacts confirmed to be within the STN (Mallet et al., 2007). Based on the widely differing effects between contacts separated by 1.5 mm, the authors hypothesized that there is a gradient of motor, associative, and limbic subterritories within the STN rather than sharp boundaries between areas. Because both hypomania and depression have been reported following STN DBS, the apparent discrepancy between these opposite ends of the affective spectrum may be related to stimulation of structures outside of the STN (Tommasi et al., 2008). In one study investigating acute depressive symptoms related to stimulation, electrodes were actually determined to be located outside the STN in the zona incerta (Stefurak et al., 2003). Another report of acute depression following STN DBS demonstrated that the depressive symptoms were only elicited with stimulation of contacts located within the substantia nigra ventral to the STN (Bejjani et al., 1999).

In reviewing these selected studies that isolate the effect of STN DBS on cognitive and affective processes, two themes emerge. Although this is not the case in every study, many experiments involving high-conflict decision processes demonstrate increased errors during STN DBS, suggesting that such stimulation may be disruptive of normal physiologic brain activity in regions involved in high-conflict cognitive processes. Such a specific cognitive function is concordant with the observed discrepancy between global cognitive effects of STN DBS and specific changes seen in isolated studies. The most compelling correlation between the experimental results and the clinical effects is the relationship between impaired high-conflict decision-making and increased impulsivity. Such a relationship may underlie the increased rates of suicide attempts (Voon et al., 2008) and reports of

Bereitgestellt von | De Gruyter / TCS
Angemeldet | 46.30.84.116
Heruntergeladen am | 28.02.14 10:21

pathologic gambling (Halbig et al., 2009) following STN DBS. Although these behavioral changes may be related to affective processes as well, the specific affective functions of the STN are much less well defined. Increased depression is less common than the noted cognitive side effects, is poorly reproduced, and often seems to be related to stimulation of structures outside the STN. On the contrary, hypomania seems to be more intrinsically related to the STN function. Although a further exploration of this domain is warranted, it does appear that the anatomic subdivisions of the STN, with limbic areas located ventromedially, correlate with clinical observations.

Human imaging studies

An obvious advantage of using imaging studies to investigate STN function is that the information may be obtained from healthy subjects or patients without PD. This affords insight into the function of the STN in cognitive and affective processes in the normal physiologic state. One challenge that arises when using imaging modalities to investigate the STN, however, is that the structure is relatively small, and because of thresholding requirements, the STN must be identified in advance as region of interest to detect its activity change. Although several studies have demonstrated widespread changes associated with STN DBS and its cognitive and affective effects, only as the nonmotor functions of the STN have become increasingly recognized have imaging studies investigated the specific correlates of these processes.

In recent years, several groups have used functional imaging studies to investigate the cognitive functions of the STN. In one of the first of these studies, increased reaction times seen during high-conflict stimuli presented in the Stroop color interference task correspond to increased regional cerebral blood flow (rCBF) in the anterior cingulated cortex (Schroeder et al., 2002). Although error rates in this study did not change with DBS STN stimulation, stimulation resulted in decreased rCBF in the anterior cingulate cortex and ventral striatum and increased rCBF in the left angular gyrus, confirming the involvement of STN in the anterior cingulate cortico-basal ganglia-thalamocortical loop (Pochon et al., 2008). Notably in this study, reaction times increased with stimulation, suggesting that an alternate, slower pathway of response inhibition was employed in this state (Schroeder et al., 2002). In a subsequent study, STN stimulation resulted in decreased left frontotemporal and right orbitofrontal rCBF concomitant with a decrease in a verbal fluency task (Schroeder et al., 2003). The observed decrease in verbal fluency with stimulation, consistent with clinical observations, suggests that the role of the STN in this function relates to the generation of verbal concepts and not simply motor control of speech. Similarly, a separate study demonstrated decreases in verbal fluency in patients after STN DBS related to decreased activity in the left inferior frontal, temporal, and insular and right orbitofrontal cortices (Kalbe et al., 2009). Interestingly, in both studies, impacted cortical areas demonstrated decreased activity with STN stimulation in contrast to the demonstrated increases in motor area activity associated with the motor benefits of STN DBS (Karimi et al., 2008).

An examination of imaging changes in humans as a result of STN stimulation is, of course, only possible in patients with PD who have undergone DBS. As a result, these studies are naturally limited in their ability to delineate the intrinsic cognitive processes housed in the STN in the healthy state. Recently, several functional imaging studies in healthy control subjects have overcome this difficulty. Using functional magnetic resonance imaging (fMRI), the activity of the STN and its relationship with the inferior frontal cortex and presupplementary motor cortex were examined when subjects attempted to quickly inhibit an initiated motor response (Aron and Poldrack, 2006). STN activation correlated with the speed of inhibition, and tractography in this study provided evidence for a hyperdirect pathway connecting the inferior frontal cortex and STN and for an additional connection with the presupplementary motor area (Figure 4). In concordance with the posited role of this network in response inhibition, fMRI demonstrated increased activity that correlated with reaction time in this network in the right hemisphere during trials involving conflict (Aron et al., 2007).

In another study investigating STN and presupplementary motor area activation, activity specifically increased in the right STN with increased response threshold in anticipation of high-conflict choices but decreased in the left STN activity during the highest conflict state (Mansfield et al., 2011). These findings remain to be explained, although one interpretation by the authors suggests that, at a certain elevated conflictual state, the left STN may simply shut off. Conversely, another study further demonstrated the combined connections through the hyperdirect and indirect pathways but failed to show specific activity in the right STN (Jahfari et al., 2011).

As with cognitive changes, several studies have attempted to explore the affective changes of DBS through the changes in functional imaging. Increases in rCBF have

Bereitgestellt von | De Gruyter / TCS
Angemeldet | 46.30.84.116
Heruntergeladen am | 28.02.14 10:21

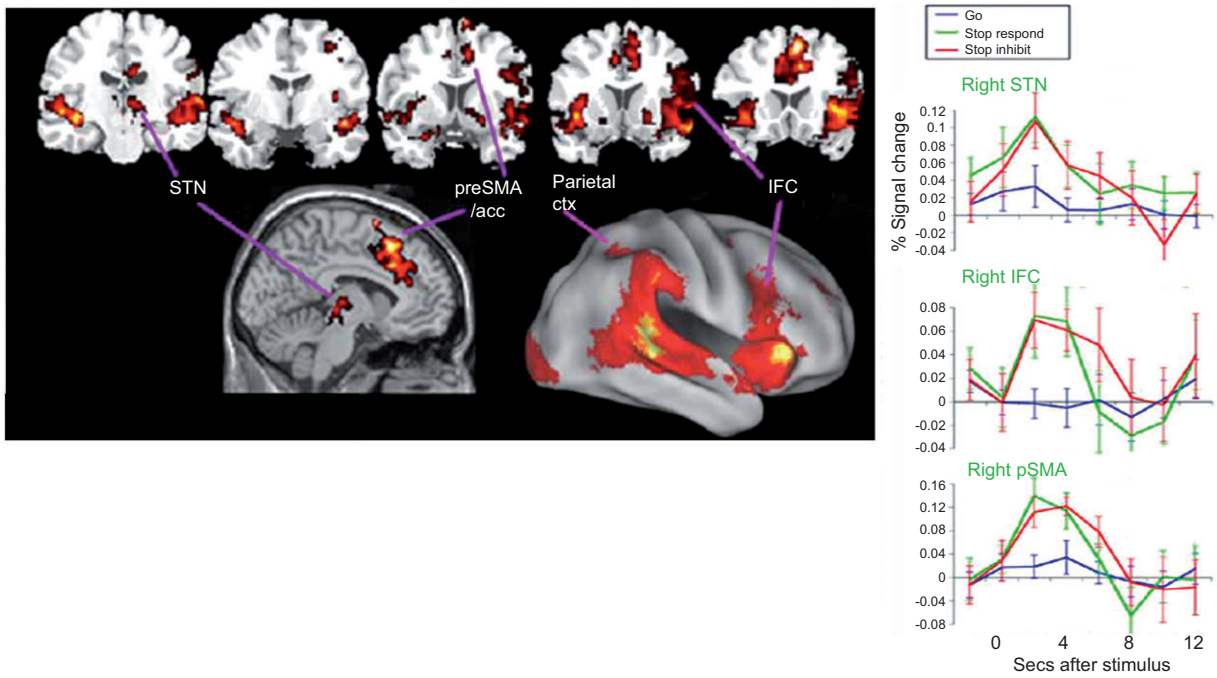

Figure 4 fMRI evidence of the involvement of the STN in a network responsible for response inhibition.
In this task, subjects were required to either press a button in a given direction after a cue or withhold from pressing after a variable interval. This comparison of the activation during a response inhibition and a "go" cue demonstrate the network including the right lateralized STN, inferior frontal cortex, globus pallidus, and presupplementary motor area. (Right) Peristimulus plots for different trial types with mean activation for different regions involved in this network. Reproduced from Aron and Poldrack (2006) (Reprinted with permission from the original reference).

been demonstrated in the left thalamus, right middle and inferior temporal, right inferior parietal, and right inferior frontal gyri during the hypomanic state, with simultaneous decreases in the left posterior middle temporal, occipital, and middle frontal gyri and bilateral cuneus and anterior cingulate gyri (Mallet et al., 2007). Conversely, in patients demonstrating significantly increased apathy after STN DBS, hypometabolism was demonstrated in the anterior cingulate gyrus bilaterally and the left frontal gyrus, whereas increased metabolism in the right middle and inferior frontal gyri, right temporal fusiform gyrus, and right postcentral gyrus correlated with apathy scores (Le Jeune et al., 2009). These disparate changes in cortical metabolism provide evidence for the role of the STN in widespread networks involved in emotional processing (Bartels and Zeki, 2000).

As with the data emerging from human clinical effects of STN DBS, the results of these recent imaging studies have coalesced to some degree. The role of the STN in specific cognitive and affective processes certainly appears to be related to specific but widespread changes seen in connected regions during high-conflict decisions and various emotional states and is further supported by human electrophysiologic data.

Human electrophysiology

DBS surgery often involves microelectrode recording of neuronal activity and stimulation of the target structures while the patient remains awake. This technique allows the precise localization of the desired target and helps avoid undesirable side effects. The neuronal activity captured during this process includes both single unit activity and local field potentials (LFP). In some instances, stimulating electrode leads may be externalized temporarily before final implantation of the pulse generator, providing access to LFP signals. As the nonmotor functions of the STN have become increasingly recognized, several groups have taken advantage of the opportunities afforded by these procedures to investigate the changes in STN activity during various cognitive and behavioral tasks. These studies have helped elucidate the specific functions of the STN and have allowed experimental evaluation of some of the theoretical and anatomic models discussed above.

Electrophysiologic studies of STN involvement in cognitive processes point to the particular role of the STN in tasks that cause increased cognitive demand. Complex cognitive processing in a visual task resulted in decreases in STN α power (Rektor et al., 2009). In an auditory task,

Bereitgestellt von | De Gruyter / TCS
Angemeldet | 46.30.84.116
Heruntergeladen am | 28.02.14 10:21

STN event-related potentials (ERP) did not change when subjects were instructed to simply count the occurrence of change in auditory tone. In a modified version of the task that required a secondary calculation with each change in tone, however, ERPs demonstrated increased amplitude and latency (Balaz et al., 2008). Of note, the task in this study did not involve any motor component, suggesting that the STN cognitive activity may indeed be independent of motor processes. In a subsequent study investigating the effects on STN activity of transcranial magnetic stimulation of the inferior frontal cortex, inferior frontal transcranial magnetic stimulation decreased latency of the STN ERP, providing indirect evidence for the hyperdirect pathway (Rektor et al., 2009). Consistent with the hypothesis that STN activity modulates the activity of other structures within the associative and limbic circuits, increases in mPFC observed during high-conflict decisions in normal controls are disrupted in the presence of DBS STN stimulation (Cavanagh et al., 2011). These changes in mPFC θ power were also reflected in STN θ power during high-conflict choices (Figures 5A and 5B) (Cavanagh et al., 2011).

In a study of STN LFP activity, patients demonstrated significantly increased low-frequency power when evaluating morally conflictual statements, supporting the hypothesis that the STN plays an important role in processes involving conflict. In a study evaluating STN LFP activity during the presentation of emotionally arousing images, images categorized as positive or negative caused greater decreases in α power than neutral images (Kuhn et al., 2005a). The authors interpreted these changes as reflective of the involvement of STN in the limbic network responsible for processing these images and found in a subsequent study that the changes in α power correlated with the degree of positive valence of presented images (Brucke et al., 2007). Notably, α activity did not correlate with pure arousal associated with the images, suggesting that the STN may be involved in only specific components of limbic system function.

Finally, in the only study investigating single-unit human STN activity as it relates to decision conflict, patients were first instructed to learn the relative reward probabilities of different visual symbols and then asked to choose between the symbols in a subsequent decision task. STN single-unit neuronal activity demonstrated significantly greater firing rates during high-conflict trials compared with medium- and low-conflict trials (Figures 5C and 5D) (Zaghloul et al., 2012).

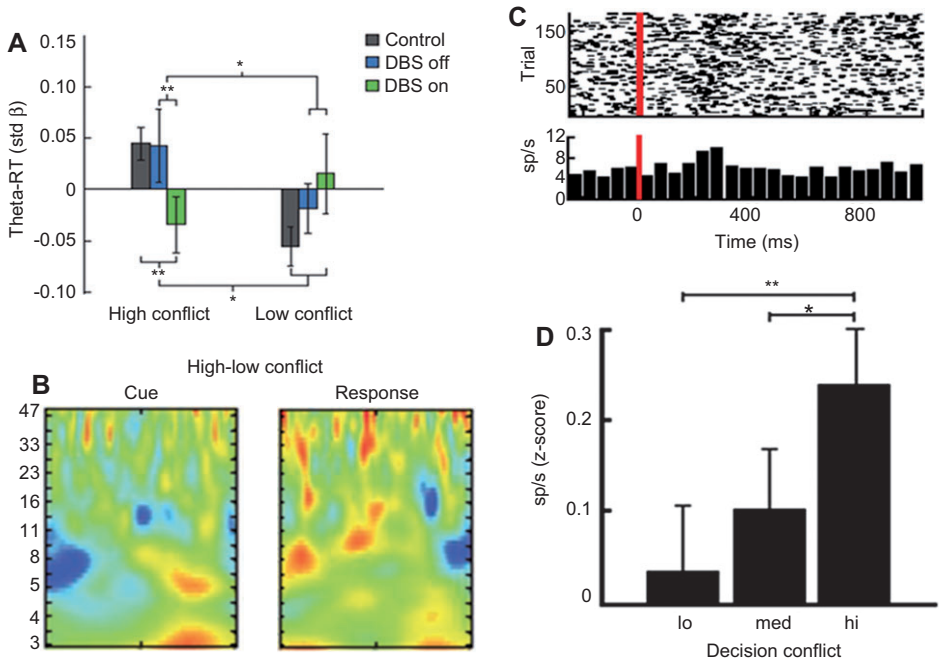

Figure 5 (A) When comparing scalp electroencephalogram (EEG) recording from the mediofrontal cortex during decision-making with STN DBS turned on compared with turned off, STN stimulation results in significantly decreased θ power in the mediofrontal cortex during high-conflict decisions. (B) This change in mediofrontal scalp EEG correlated with STN intracranial EEG changes during high-conflict decisions, with increased STN θ power and β suppression. (C) Single-unit activity in the STN during decisions is demonstrated to be increased after the decision cue (red line) in all trials. (D) This activity is significantly increased during high-conflict trials. Reproduced from Cavanagh et al. (2011) (A and B) and Zaghloul et al. (2012) (C and D) (Reprinted with permission from the original reference).

Bereitgestellt von | De Gruyter / TCS
Angemeldet | 46.30.84.116
Heruntergeladen am | 28.02.14 10:21

Taken as a whole, the above studies of human STN electrophysiologic data strongly suggest a role of the STN in conflictual decision-making and are consistent with the behavioral, imaging, and stimulation data discussed. As with the findings in these areas, the data are most robust with regard to cognitive processes, although the limbic involvement of the STN is strongly suggested as well.

Conclusion

The role of the STN in cognitive and affective has been recognized and increasingly well characterized. Through anatomic and computational models, experimental animal studies, experiences of clinical side effects in patients undergoing STN DBS, imaging studies, and human electrophysiology, a cohesive picture of the cognitive and affective functions of the STN is emerging. Structurally, although the dorsal components are responsible for motor pathway, the ventral and medial components of the STN appear to be involved in cognitive and affective pathways. The activity of these subterritories can now be seen as functioning in specific processes rather than the global cognitive or emotional state. The most compelling of these findings is the increased STN activity during decisions requiring high cognitive burden. The connection of this activity with the associated frontal activity is consistent with the function of the STN as a pivotal node linking cognitive and motor processes.

Received September 15, 2012; accepted November 19, 2012; previously published online January 18, 2013

References

Alexander, G.E. and Crutcher, M.D. (1990). Functional architecture of basal ganglia circuits: neural substrates of parallel processing. Trends Neurosci. *13*, 266–271.

Alexander, G.E., Crutcher, M.D., and DeLong, M.R. (1990). Basal ganglia-thalamocortical circuits: parallel substrates for motor, oculomotor, “prefrontal” and “limbic” functions. Prog. Brain Res. *85*, 119–146.

Aron, A.R. and Poldrack, R.A. (2006). Cortical and subcortical contributions to Stop signal response inhibition: role of the subthalamic nucleus. J. Neurosci. *26*, 2424–2433.

Aron, A.R., Behrens, T.E., Smith, S., Frank, M.J., and Poldrack, R.A. (2007). Triangulating a cognitive control network using diffusion-weighted magnetic resonance imaging (MRI) and functional MRI. J. Neurosci. *27*, 3743–3752.

Balaz, M., Rektor, I., and Pulkrabek, J. (2008). Participation of the subthalamic nucleus in executive functions: an intracerebral recording study. Mov. Disord. *23*, 553–557.

Ballanger, B., van Eimeren, T., Moro, E., Lozano, A.M., Hamani, C., Boulinguez, P., Pellecchia, G., Houle, S., Poon, Y.Y., Lang, A.E., et al. (2009). Stimulation of the subthalamic nucleus and impulsivity: release your horses. Ann. Neurol. *66*, 817–824.

Bartels, A. and Zeki, S. (2000). The neural basis of romantic love. Neuroreport *11*, 3829–3834.

Baunez, C. and Lardeux, S. (2011). Frontal cortex-like functions of the subthalamic nucleus. Front. Syst. Neurosci. *5*, 83.

Baunez, C. and Robbins, T.W. (1997). Bilateral lesions of the subthalamic nucleus induce multiple deficits in an attentional task in rats. Eur. J. Neurosci. *9*, 2086–2099.

Baunez, C., Nieoullon, A., and Amalric, M. (1995). In a rat model of parkinsonism, lesions of the subthalamic nucleus reverse increases of reaction time but induce a dramatic premature responding deficit. J. Neurosci. *15*, 6531–6541.

Baunez, C., Amalric, M., and Robbins, T.W. (2002). Enhanced food-related motivation after bilateral lesions of the subthalamic nucleus. J. Neurosci. *22*, 562–568.

Baunez, C., Dias, C., Cador, M., and Amalric, M. (2005). The subthalamic nucleus exerts opposite control on cocaine and ‘natural’ rewards. Nat. Neurosci. *8*, 484–489.

Baunez, C., Christakou, A., Chudasama, Y., Forni, C., and Robbins, T.W. (2007). Bilateral high-frequency stimulation of the subthalamic nucleus on attentional performance: transient deleterious effects and enhanced motivation in both intact and parkinsonian rats. Eur. J. Neurosci. *25*, 1187–1194.

Bejjani, B.P., Damier, P., Arnulf, I., Thivard, L., Bonnet, A.M., Dormont, D., Cornu, P., Pidoux, B., Samson, Y., and Agid, Y. (1999). Transient acute depression induced by high-frequency deep-brain stimulation. N. Engl. J. Med. *340*, 1476–1480.

Bergman, H., Wichmann, T., and DeLong, M.R. (1990). Reversal of experimental parkinsonism by lesions of the subthalamic nucleus. Science *249*, 1436–1438.

Bergman, H., Wichmann, T., Karmon, B., and DeLong, M.R. (1994). The primate subthalamic nucleus. II. Neuronal activity in the MPTP model of parkinsonism. J. Neurophysiol. *72*, 507–520.

Bogacz, R. and Gurney, K. (2007). The basal ganglia and cortex implement optimal decision making between alternative actions. Neural Comput. *19*, 442–477.

Brown P., Mazzone, P., Oliviero, A., Altibrandi, M.G., Pilato, F., Tonali, P.A., and Di Lazzaro, V. (2004). Effects of stimulation of the subthalamic area on oscillatory pallidal activity in Parkinson’s disease. Exp. Neurol. *188*, 480–490.

Brucke, C., Kupsch, A., Schneider, G.H., Hariz, M.I., Nuttin, B., Kopp, U., Kempf, F., Trottenberg, T., Doyle, L., Chen, C.C., et al. (2007). The subthalamic region is activated during valence-related emotional processing in patients with Parkinson’s disease. Eur. J. Neurosci. *26*, 767–774.

Cavanagh, J.F., Wiecki, T.V., Cohen, M.X., Figueroa, C.M., Samanta, J., Sherman, S.J., and Frank, M.J. (2011). Subthalamic nucleus stimulation reverses mediofrontal influence over decision threshold. Nat. Neurosci. *14*, 1462–1467.

Bereitgestellt von | De Gruyter / TCS
Angemeldet | 46.30.84.116
Heruntergeladen am | 28.02.14 10:21

Contarino, M.F., Daniele, A., Sibilia, A.H., Romito, L.M., Bentivoglio, A.R., Gainotti, G., and Albanese, A. (2007). Cognitive outcome 5 years after bilateral chronic stimulation of subthalamic nucleus in patients with Parkinson's disease. J. Neurol. Neurosurg. Psychiatry *78*, 248–252.

Darbaky, Y., Baunez, C., Arecchi, P., Legallet, E., and Apicella, P. (2005). Reward-related neuronal activity in the subthalamic nucleus of the monkey. Neuroreport *16*, 1241–1244.

Desbonnet, L., Temel, Y., Visser-Vandewalle, V., Blokland, A., Hornikx, V., and Steinbusch, H.W. (2004). Premature responding following bilateral stimulation of the rat subthalamic nucleus is amplitude and frequency dependent. Brain Res. *1008*, 198–204.

Deuschl, G., Schade-Brittinger, C., Krack, P., Volkmann, J., Schafer, H., Botzel, K., Daniels, C., Deutschländer, A., Dillmann, U., Eisner, W., et al. (2006). A randomized trial of deep-brain stimulation for Parkinson's disease. N. Engl. J. Med. *355*, 896–908.

Eagle, D.M., Baunez, C., Hutcheson, D.M., Lehmann, O., Shah, A.P., and Robbins, T.W. (2008). Stop-signal reaction-time task performance: role of prefrontal cortex and subthalamic nucleus. Cereb. Cortex *18*, 178–188.

Fasano, A., Romito, L.M., Daniele, A., Piano, C., Zinno, M., Bentivoglio, A.R., and Albanese, A. (2010). Motor and cognitive outcome in patients with Parkinson's disease 8 years after subthalamic implants. Brain *133*, 2664–2676.

Follett, K.A., Weaver, F.M., Stern, M., Hur, K., Harris, C.L., Luo, P., Marks, W.J. Jr, Rothlind, J., Sagher, O., Moy, C., et al. (2010). Pallidal versus subthalamic deep-brain stimulation for Parkinson's disease. N. Engl. J. Med. *362*, 2077–2091.

Frank, M.J. (2006). Hold your horses: a dynamic computational role for the subthalamic nucleus in decision making. Neural Netw. *19*, 1120–1136.

Frank, M.J., Samanta, J., Moustafa, A.A., and Sherman, S.J. (2007). Hold your horses: impulsivity, deep brain stimulation, and medication in parkinsonism. Science *318*, 1309–1312.

Fraraccio, M., Ptito, A., Sadikot, A., Panisset, M., and Dagher, A. (2008). Absence of cognitive deficits following deep brain stimulation of the subthalamic nucleus for the treatment of Parkinson's disease. Arch. Clin. Neuropsychol. *23*, 399–408.

Goldberg, J.A., Rokni, U., Boraud, T., Vaadia, E., and Bergman, H. (2004). Spike synchronization in the cortex/basal-ganglia networks of Parkinsonian primates reflects global dynamics of the local field potentials. J. Neurosci. *24*, 6003–6010.

Gurney, K., Prescott, T.J., and Redgrave, P. (2001). A computational model of action selection in the basal ganglia. I. A new functional anatomy. Biol. Cybern. *84*, 401–410.

Halbig, T.D., Gruber, D., Kopp, U.A., Scherer, P., Schneider, G.H., Trottenberg, T., Arnold, G., and Kupsch, A. (2004). Subthalamic stimulation differentially modulates declarative and nondeclarative memory. Neuroreport *15*, 539–543.

Halbig, T.D., Tse, W., Frisina, P.G., Baker, B.R., Hollander, E., Shapiro, H., Tagliati, M., Koller, W.C., and Olanow, C.W. (2009). Subthalamic deep brain stimulation and impulse control in Parkinson's disease. Eur. J. Neurol. *16*, 493–497.

Hamani, C., Saint-Cyr, J.A., Fraser, J., Kaplitt, M., and Lozano, A.M. (2004). The subthalamic nucleus in the context of movement disorders. Brain *127*, 4–20.

Hammond, C., Bergman, H., and Brown, P. (2007). Pathological synchronization in Parkinson's disease: networks, models and treatments. Trends Neurosci. *30*, 357–364.

Heimer, G., Bar-Gad, I., Goldberg, J.A., and Bergman, H. (2002). Dopamine replacement therapy reverses abnormal synchronization of pallidal neurons in the 1-methyl-4-phenyl-1,2,3,6-tetrahydropyridine primate model of parkinsonism. J. Neurosci. *22*, 7850–7855.

Hershey, T., Revilla, F.J., Wernle, A., Gibson, P.S., Dowling, J.L., and Perlmutter, J.S. (2004). Stimulation of STN impairs aspects of cognitive control in PD. Neurology *62*, 1110–1114.

Humphries, M.D., Stewart, R.D., and Gurney, K.N. (2006). A physiologically plausible model of action selection and oscillatory activity in the basal ganglia. J. Neurosci. *26*, 12921–12942.

Isoda, M. and Hikosaka, O. (2008). Role for subthalamic nucleus neurons in switching from automatic to controlled eye movement. J. Neurosci. *28*, 7209–7218.

Jahanshahi, M., Ardouin, C.M., Brown, R.G., Rothwell, J.C., Obeso, J., Albanese, A., Rodriguez-Oroz, M.C., Moro, E., Benabid, A.L., Pollak, P., et al. (2000). The impact of deep brain stimulation on executive function in Parkinson's disease. Brain *123*, 1142–1154.

Jahfari, S., Waldorp, L., van den Wildenberg, W.P., Scholte, H.S., Ridderinkhof, K.R., and Forstmann, B.U. (2011). Effective connectivity reveals important roles for both the hyperdirect (fronto-subthalamic) and the indirect (fronto-striatal-pallidal) fronto-basal ganglia pathways during response inhibition. J. Neurosci. *31*, 6891–6899.

Kable, J.W. and Glimcher, P.W. (2009). The neurobiology of decision: consensus and controversy. Neuron *63*, 733–745.

Kalbe, E., Voges, J., Weber, T., Haarer, M., Baudrexel, S., Klein, J.C., Kessler, J., Sturm, V., Heiss, W.D., Hilker, R. (2009). Frontal FDG-PET activity correlates with cognitive outcome after STN-DBS in Parkinson disease. Neurology *72*, 42–49.

Karimi, M., Golchin, N., Tabbal, S.D., Hershey, T., Videen, T.O., Wu, J., Usche, J.W., Revilla, F.J., Hartlein, J.M., Wernle, A.R., et al. (2008). Subthalamic nucleus stimulation-induced regional blood flow responses correlate with improvement of motor signs in Parkinson disease. Brain *131*, 2710–2719.

Kuhn, A.A., Hariz, M.I., Silberstein, P., Tisch, S., Kupsch, A., Schneider, G.H., Limousin-Dowsey, P., Yarrow, K., and Brown, P. (2005a). Activation of the subthalamic region during emotional processing in Parkinson disease. Neurology *65*, 707–713.

Kuhn, A.A., Trottenberg, T., Kivi, A., Kupsch, A., Schneider, G.H., and Brown, P. (2005b). The relationship between local field potential and neuronal discharge in the subthalamic nucleus of patients with Parkinson's disease. Exp. Neurol. *194*, 212–220.

Lardeux, S. and Baunez, C. (2008). Alcohol preference influences the subthalamic nucleus control on motivation for alcohol in rats. Neuropsychopharmacology *33*, 634–642.

Le Jeune, F., Drapier, D., Bourguignon, A., Peron, J., Mesbah, H., Drapier, S., Sauleau, P., Haegelen, C., Travers, D., Garin, E., et al. (2009). Subthalamic nucleus stimulation in Parkinson disease induces apathy: a PET study. Neurology *73*, 1746–1751.

Levy, R., Ashby, P., Hutchison, W.D., Lang, A.E., Lozano, A.M., and Dostrovsky, J.O. (2002). Dependence of subthalamic nucleus oscillations on movement and dopamine in Parkinson's disease. Brain *125*, 1196–1209.

Limousin, P., Pollak, P., Benazzouz, A., Hoffmann, D., Broussolle, E., Perret, J.E., and Benabid, A.L. (1995a). Bilateral subthalamic nucleus stimulation for severe Parkinson's disease. Mov. Disord. *10*, 672–674.

Bereitgestellt von | De Gruyter / TCS
Angemeldet | 46.30.84.116
Heruntergeladen am | 28.02.14 10:21

Limousin, P., Pollak, P., Benazzouz, A., Hoffmann, D., Le Bas, J.F., Broussolle, E., Perret, J.E., and Benabid, A.L. (1995b). Effect of parkinsonian signs and symptoms of bilateral subthalamic nucleus stimulation. Lancet *345*, 91–95.

Mallet, L., Schupbach, M., N'Diaye, K., Remy, P., Bardinet, E., Czernecki, V., Welter, M.L., Pelissolo, A., Ruberg, M., Agid, Y., et al. (2007). Stimulation of subterritories of the subthalamic nucleus reveals its role in the integration of the emotional and motor aspects of behavior. Proc. Natl. Acad. Sci. USA *104*, 10661–10666.

Mansfield, E.L., Karayanidis, F., Jamadar, S., Heathcote, A., and Forstmann, B.U. (2011). Adjustments of response threshold during task switching: a model-based functional magnetic resonance imaging study. J. Neurosci. *31*, 14688–14692.

Marsden, C.D. and Obeso, J.A. (1994). The functions of the basal ganglia and the paradox of stereotaxic surgery in Parkinson's disease. Brain *117*, 877–897.

Matsumura, M., Kojima, J., Gardiner, T.W., and Hikosaka, O. (1992). Visual and oculomotor functions of monkey subthalamic nucleus. J. Neurophysiol. *67*, 1615–1632.

Meissner, W., Leblois, A., Hansel, D., Bioulac, B., Gross, C.E., Benazzouz, A., and Boraud, T. (2005). Subthalamic high frequency stimulation resets subthalamic firing and reduces abnormal oscillations. Brain *128*, 2372–2382.

Nambu, A. (2004). A new dynamic model of the cortico-basal ganglia loop. Prog. Brain Res. *143*, 461–466.

Nambu, A., Tokuno, H., and Takada, M. (2002). Functional significance of the cortico-subthalamo-pallidal 'hyperdirect' pathway. Neurosci. Res. *43*, 111–117.

Okun, M.S., Fernandez, H.H., Wu, S.S., Kirsch-Darrow, L., Bowers, D., Bova, F., Suelter, M., Jacobson, C.E. 4th, Wang, X., Gordon, C.W. Jr., et al. (2009). Cognition and mood in Parkinson's disease in subthalamic nucleus versus globus pallidus interna deep brain stimulation: the COMPARE trial. Ann. Neurol. *65*, 586–595.

Parent, A. and Hazrati, L.N. (1995). Functional anatomy of the basal ganglia. II. The place of subthalamic nucleus and external pallidum in basal ganglia circuitry. Brain Res. Brain Res. Rev. *20*, 128–154.

Pochon, J.B., Riis, J., Sanfey, A.G., Nystrom, L.E., and Cohen, J.D. (2008). Functional imaging of decision conflict. J. Neurosci. *28*, 3468–3473.

Ratcliff, R. and Frank, M.J. (2012). Reinforcement-based decision making in corticostriatal circuits: mutual constraints by neurocomputational and diffusion models. Neural Comput. *24*, 1186–1229.

Rektor, I., Balaz, M., and Bockova, M. (2009). Cognitive activities in the subthalamic nucleus. Invasive studies. Parkinsonism Relat. Disord. *15(Suppl 3)*, S83–S86.

Rodriguez-Oroz, M.C., Obeso, J.A., Lang, A.E., Houeto, J.L., Pollak, P., Rehncrona, S., Kulisevsky, J., Albanese, A., Volkmann, J., Hariz, M.I., et al. (2005). Bilateral deep brain stimulation in Parkinson's disease: a multicentre study with 4 years follow-up. Brain *128*, 2240–2249.

Rouaud, T., Lardeux, S., Panayotis, N., Paleressompoulle, D., Cador, M., and Baunez, C. (2010). Reducing the desire for cocaine with subthalamic nucleus deep brain stimulation. Proc. Natl. Acad. Sci. USA *107*, 1196–1200.

Schroeder, U., Kuehler, A., Haslinger, B., Erhard, P., Fogel, W., Tronnier, V.M., Lange, K.W., Boecker, H., and Ceballos-Baumann, A.O. (2002). Subthalamic nucleus stimulation affects striato-anterior cingulate cortex circuit in a response conflict task: a PET study. Brain *125*, 1995–2004.

Schroeder, U., Kuehler, A., Lange, K.W., Haslinger, B., Tronnier, V.M., Krause, M., Pfister, R., Boecker, H., and Ceballos-Baumann, A.O. (2003). Subthalamic nucleus stimulation affects a fronto-temporal network: a PET study. Ann. Neurol. *54*, 445–450.

Stefurak, T., Mikulis, D., Mayberg, H., Lang, A.E., Hevenor, S., Pahapill, P., Saint-Cyr, J., and Lozano, A. (2003). Deep brain stimulation for Parkinson's disease dissociates mood and motor circuits: a functional MRI case study. Mov. Disord. *18*, 1508–1516.

Temel, Y., Blokland, A., Steinbusch, H.W., and Visser-Vandewalle, V. (2005). The functional role of the subthalamic nucleus in cognitive and limbic circuits. Prog. Neurobiol. *76*, 393–413.

Temel, Y., Blokland, A., Ackermans, L., Boon, P., van Kranen-Mastenbroek, V.H., Beuls, E.A., Spincemaille, G.H., and Visser-Vandewalle, V. (2006a). Differential effects of subthalamic nucleus stimulation in advanced Parkinson disease on reaction time performance. Exp Brain Res. *169*, 389–399.

Temel, Y., Kessels, A., Tan, S., Topdag, A., Boon, P., and Visser-Vandewalle, V. (2006b). Behavioural changes after bilateral subthalamic stimulation in advanced Parkinson disease: a systematic review. Parkinsonism Relat. Disord. *12*, 265–272.

Tommasi, G., Lanotte, M., Albert, U., Zibetti, M., Castelli, L., Maina, G., and Lopiano, L. (2008). Transient acute depressive state induced by subthalamic region stimulation. J. Neurol. Sci. *273*, 135–138.

Voon, V., Kubu, C., Krack, P., Houeto, J.L., and Troster, A.I. (2006). Deep brain stimulation: neuropsychological and neuropsychiatric issues. Mov. Disord. *21(Suppl 14)*, S305–S327.

Voon, V., Krack, P., Lang, A.E., Lozano, A.M., Dujardin, K., Schupbach, M., D'Ambrosia, J., Thobois, S., Tamma, F., Herzog, J., et al. (2008). A multicentre study on suicide outcomes following subthalamic stimulation for Parkinson's disease. Brain *131*, 2720–2728.

Weaver, F.M., Follett, K., Stern, M., Hur, K., Harris, C., Marks, W.J., Jr., Rothlind, J., Sagher, O., Reda, D., Moy, C.S., et al. (2009). Bilateral deep brain stimulation vs best medical therapy for patients with advanced Parkinson disease: a randomized controlled trial. J. Am. Med. Assoc. *301*, 63–73.

Weinberger, M., Mahant, N., Hutchison, W.D., Lozano, A.M., Moro, E., Hodaie, M., Lang, A.E., and Dostrovsky, J.O. (2006). Beta oscillatory activity in the subthalamic nucleus and its relation to dopaminergic response in Parkinson's disease. J. Neurophysiol. *96*, 3248–3256.

Wichmann, T., Bergman, H., and DeLong, M.R. (1994a). The primate subthalamic nucleus. I. Functional properties in intact animals. J. Neurophysiol. *72*, 494–506.

Wichmann, T., Bergman, H., and DeLong, M.R. (1994b). The primate subthalamic nucleus. III. Changes in motor behavior and neuronal activity in the internal pallidum induced by subthalamic inactivation in the MPTP model of parkinsonism. J. Neurophysiol. *72*, 521–530.

Wiener, M., Magaro, C.M., and Matell, M.S. (2008). Accurate timing but increased impulsivity following excitotoxic lesions of the subthalamic nucleus. Neurosci. Lett. *440*, 176–180.

Williams, A., Gill, S., Varma, T., Jenkinson, C., Quinn, N., Mitchell, R., Scott, R., Ives, N., Rick, C., Daniels, J., et al. (2010). Deep

Bereitgestellt von | De Gruyter / TCS
Angemeldet | 46.30.84.116
Heruntergeladen am | 28.02.14 10:21

brain stimulation plus best medical therapy versus best medical therapy alone for advanced Parkinson's disease (PD SURG trial): a randomised, open-label trial. Lancet Neurol. *9*, 581–591.

Witt, K., Pulkowski, U., Herzog, J., Lorenz, D., Hamel, W., Deuschl, G., and Krack, P. (2004). Deep brain stimulation of the subthalamic nucleus improves cognitive flexibility but impairs response inhibition in Parkinson disease. Arch. Neurol. *61*, 697–700.

Witt, K., Daniels, C., Reiff, J., Krack, P., Volkmann, J., Pinsker, M.O., Krause, M., Tronnier, V., Kloss, M., Schnitzler, A., et al. (2008). Neuropsychological and psychiatric changes after deep brain stimulation for Parkinson's disease: a randomised, multicentre study. Lancet Neurol. *7*, 605–614.

Zaghloul, K.A., Weidemann, C.T., Lega, B.C., Jaggi, J.L., Baltuch, G.H., and Kahana, M.J. (2012). Neuronal activity in the human subthalamic nucleus encodes decision conflict during action selection. J. Neurosci. 32, 2453–2460.

Bereitgestellt von | De Gruyter / TCS
Angemeldet | 46.30.84.116
Heruntergeladen am | 28.02.14 10:21